Technical Data

Pump Name 3D 50-125/3.0

Customer	Date	2026-10-15	Company	
Contact	Item no.		Issued by	
Phone	Project		Phone	
E-mail	Project ID		E-mail	

Requested data

1	Pump type		CENTRIFUGAL PUMPS	Fluid		Water
2	Number of pumps / Reserve		1 / 0	Liquid temperature	°C	20
3	Flow	m³/h		Kin. viscosity	mm²/s	1.005
4	Head	m		Vapour pressure	kPa	2.34
5	Geodetic head	m		PH value		
6	Inlet pressure (pin)	kPa	0	Density	kg/m³	998.3
7	Available system NPSH			Solids	Weight %	0
8	Ambient temperature	°C	20			

Pump

9	Pump Name		3D 50-125/3.0	Frequency		Hz	50
10	Design		CENTRIFUGAL PUMPS	Installation type			STANDARD
11	Manufacturer		EBARA	Impeller Diameter	Max.	mm	131
12	Speed	1/min	2900		Designed	mm	131
13	No. of Stage		1		Min.	mm	131
14	Connection Suction side		EN 1092-2	Flow	Operating	m³/h	
15	Connection Discharge side		EN 1092-2		Max-	m³/h	72
16	Max Working Pressure	kPa	1000		Min-	m³/h	24
17	Shut-off head	kPa	220.33	Head	Operating	m	
18	Total weight	kg	See the table of "Dimensions".		- (Qmax.)	m	10.0
19	Shaft power	kW			- (Qmin.)	m	21.5
20				Max. Shaft Power at max. impeller		kW	2.86
21	Required pump NPSH	m		Efficiency		%	

Materials

22	Impeller	AISI 304		
23	Casing	Cast iron		
24	Shaft	AISI 304 (wet extension)		
25				
26				
27				

Motor

28	Manufacturer		EPE Standard	Insulation class		F
29	Type		TEFC_3D 50-125/3.0_400_Three Phase	Phases		3~
30	Specific design		IE3 / 50 Hz / Pole pairs 1	Frame size		
31	Rated power	kW	3	Weight	kg	
32	Number of poles		2	Electric voltage	V	400
33	Speed	1/min	2900	Electric current	A	6.4
34	Degree of protection		IP 55			
35						

Remarks

EBARA

Performance Curve

Pump Name 3D 50-125/3.0

Customer	Date 2026-10-15	Company
Contact	Item no.	Issued by
Phone	Project	Phone
E-mail	Project ID	E-mail

Requested data

1	Flow	m³/h	
2	Head	m	
3	Geodetic head	m	

Pump

Operating flow	m³/h		Frequency	Hz	50
Operating head	m		Number of poles		2
Impeller diameter designed	mm	131	Speed	1/min	2900

Test standard: ISO 9906:2012 - Grade3B

Water; 20°C; 998.3kg/m³; 1mm²/s

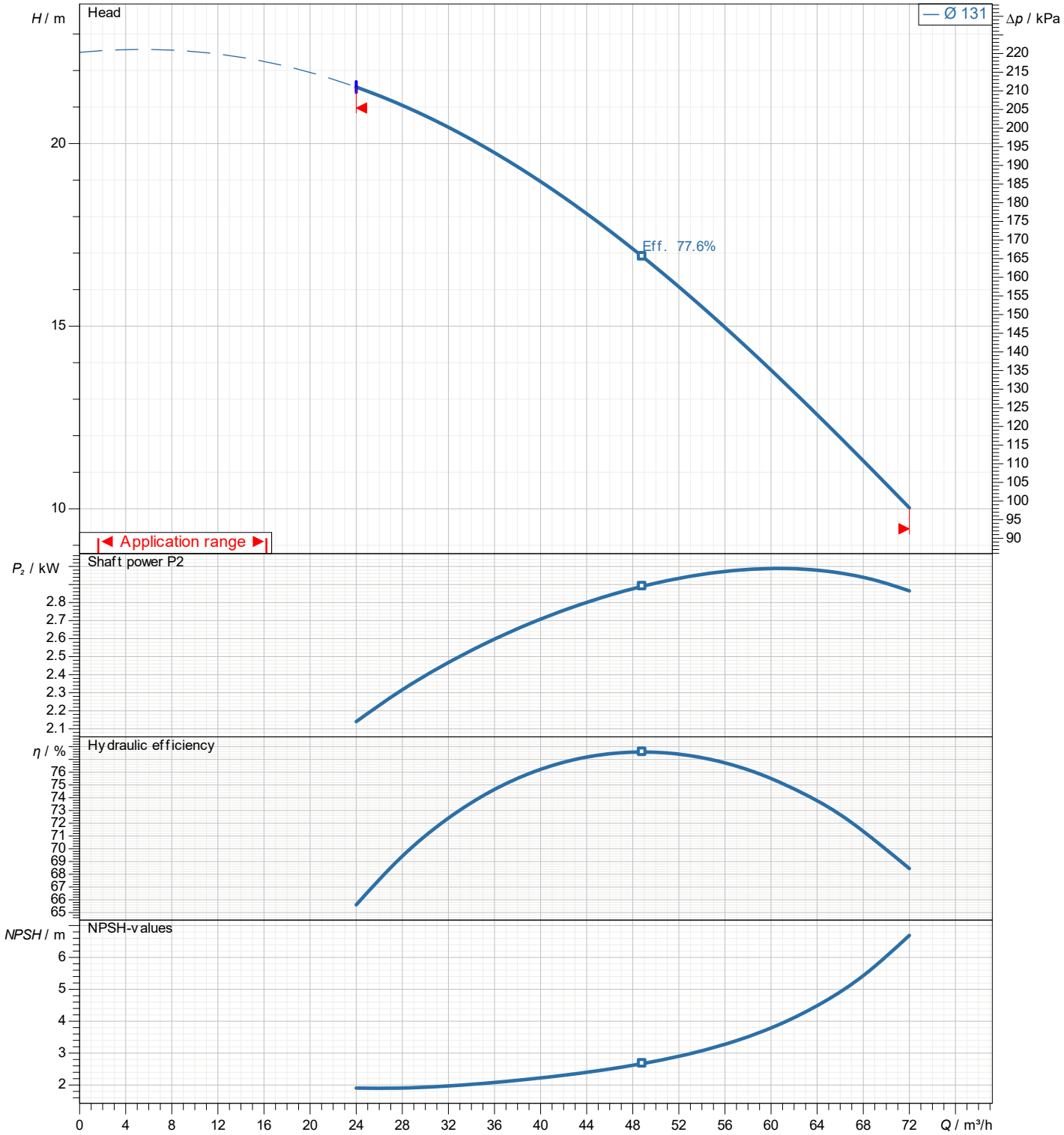

EBARA

Dimensions

Pump Name 3D 50-125/3.0

Customer	Date 2026-10-15	Company
Contact	Item no.	Issued by
Phone	Project	Phone
E-mail	Project ID	E-mail

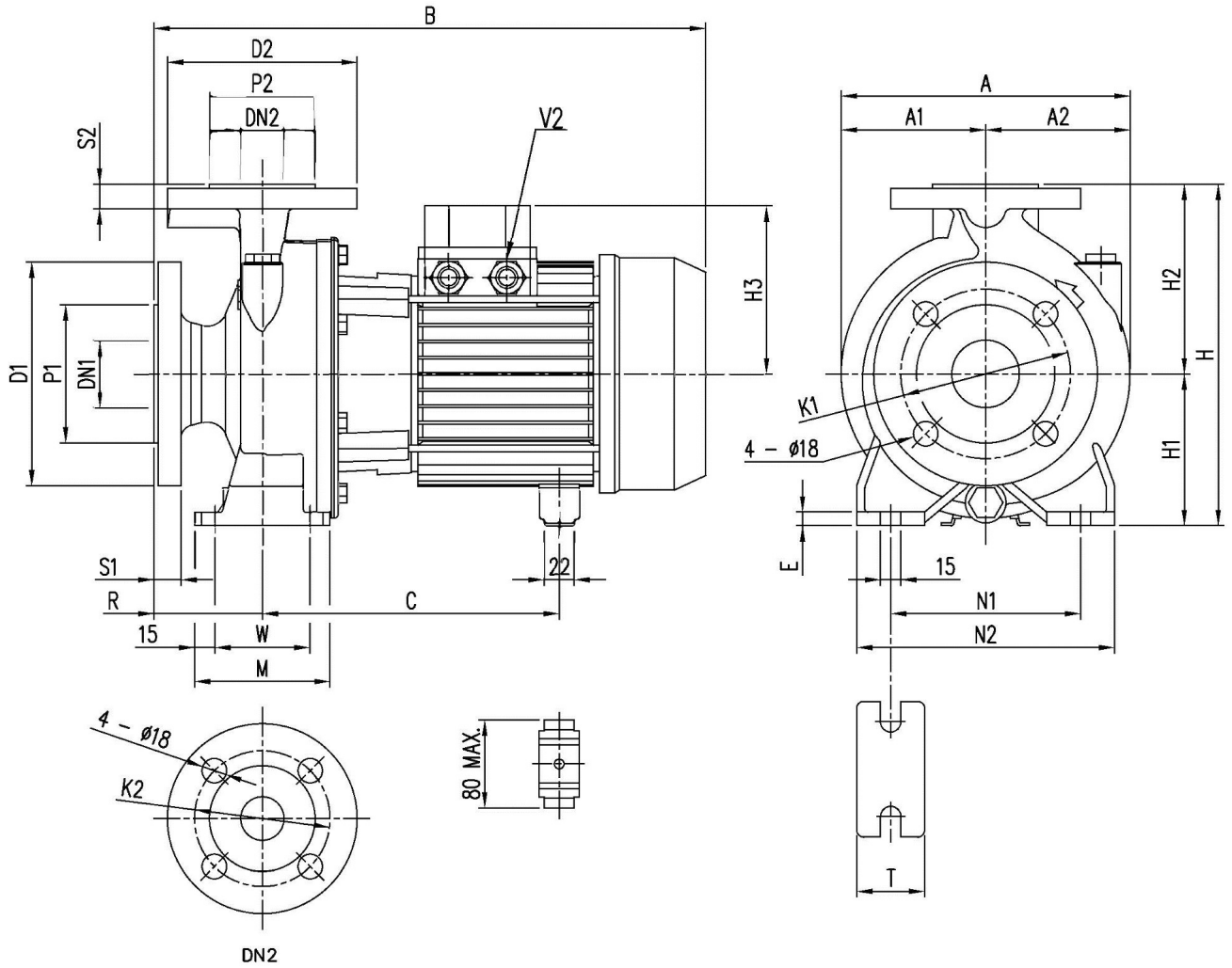

Dimensions in	mm							
1	A	254	H1	132				
2	A1	127	H2	160				
3	A2	127	H3	124				
4	B	491	M	100				
5	C	244or255	N1	190				
6	Dia D1	185	N2	240				
7	Dia D2	165	R	100				
8	Dia DN1	65	S1	20				
9	Dia DN2	50	S2	20				
10	Dia K1	145	T	50				
11	Dia K2	125	V2	M20X1,5				
12	Dia P1	122	W	70				
13	Dia P2	102	Weight P&M	39,5 kg				
14	E	10						
15	H	292						

EBARA

(1/3)
Construction

Pump Name 3D 50-125/3.0

Customer	Date 2026-10-15	Company
Contact	Item no.	Issued by
Phone	Project	Phone
E-mail	Project ID	E-mail

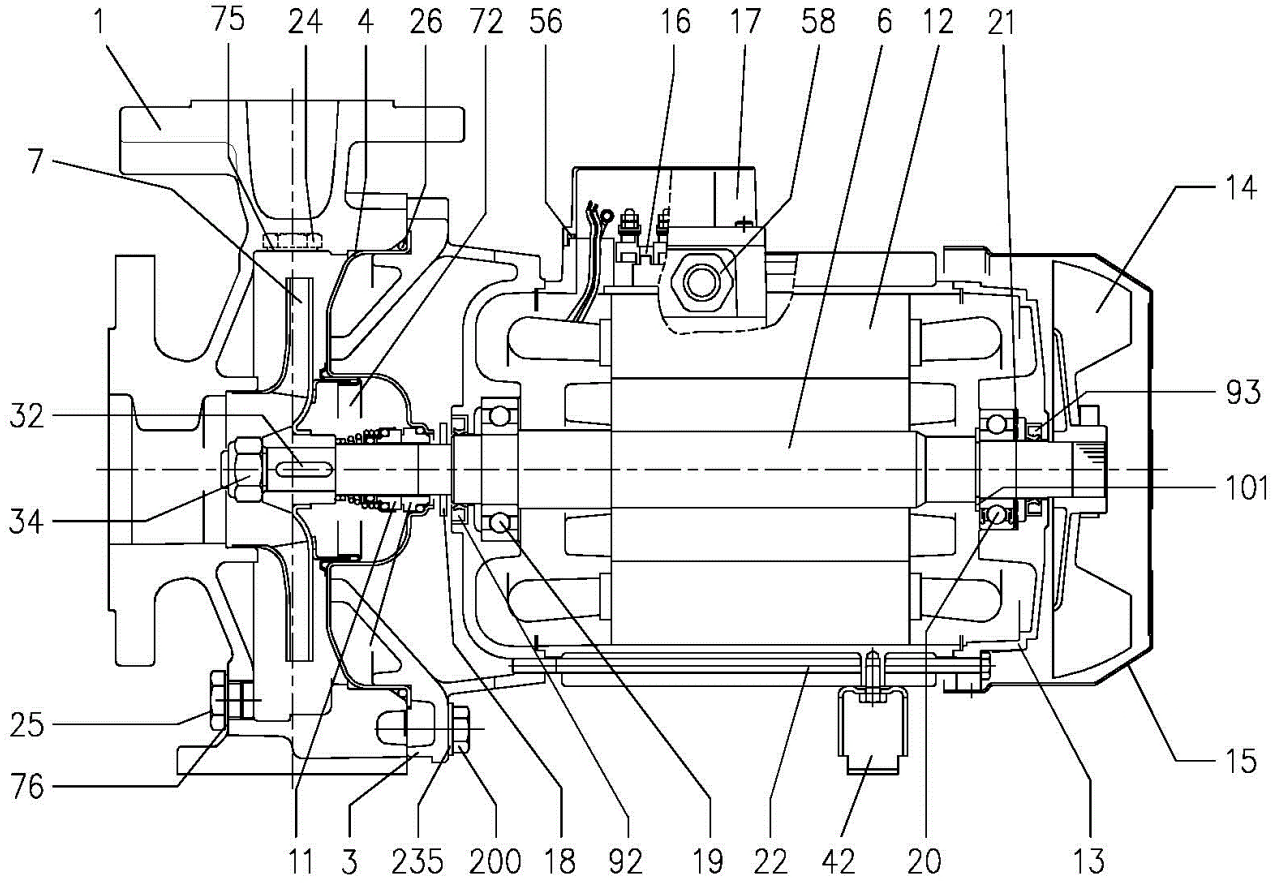

(2/3)
Construction

Pump Name 3D 50-125/3.0

Customer	Date	2026-10-15	Company	
Contact	Item no.		Issued by	
Phone	Project		Phone	
E-mail	Project ID		E-mail	

N°	PART NAME			MATERIAL	DIMENSIONS	STANDARD	Q.TY
1	Casing			Cast iron EN-GJL-250-EN 1561			1
3	Motor bracket		[1]	-			1
4	Casing cover			EN 1.4301 (AISI 304)			1
6	Shaft with rotor - Wet extension			EN 1.4301 (AISI 304)			1
7	Impeller		[2]	-			1
11	Mechanical seal		[3]	-			1
12	Motor frame with stator			-			1
13	Motor cover			Aluminium			1
14	Fan			PA			1
15	Fan cover			Fe P04 Galvanized			1
16	Terminal			-			1
17	Terminal box cover			Aluminium (three phase version)			1
18	Splash ring	Up to 11 kW		NBR	40x21.5x2	EBARA DRAWING	1
19	Bearing		[10]	-			1
20	Bearing		[10]	-			1
21	Adjusting ring			Steel C70			1
22	Tie rod	Up to 3 kW		Fe 42 Galvanized	M5	EBARA DRAWING	4
		For 4 - 5.5 - 7.5 kW			M6		
		9.2 e 11 kW			M8		
24	Priming plug			Brass	G 3/8" L=8		1
25	Draing plug			Brass	G 3/8" L=8		1
26	O-ring	32-125, 40-125	[4]	NBR/FPM/EPDM	158.11x5.34	OR 6625	1
		32-160, 40-160, 50-125, 65-125			183.52x5.34	OR 6720	
		32-200, 40-200, 50-160, 50-200/9.2, 50-200/11, 65-160/7.5, 65-160/9.2, 65-160/11			227.96x5.34	OR 6895	
32	Key	Up to 11 kW		EN 1.4401 (AISI 316)	A 6x6x25	UNI 6604	1
34	Impeller nut	Up to 11 kW		EN 1.4301 (AISI 304)	M16x1.5	UNI 7474	1
42	Foot			Aluminium / Galvanized steel		EBARA DRAWING	1
56	Box gasket			NBR			1
58	Cable gland			-			1
72	Casing ring		[5]	EN 1.4301 (AISI 304)			1
75	Washer			Aluminum	22x17x1.5	EBARA DRAWING	1
76	Washer			Aluminum			1
92	Lip seal	Up to 3 kW		-	25x40x7	DIN 3760 without spring	1
		From 4 to 7.5 kW			30x47X7		
		From 9.2 kW to 11 kW			40x55x7		
93	Lip seal	Up to 4 kW		-	25x40x7	DIN 3760 without spring	1
		From 5.5 kW to 7.5 kW			30x47X7		
		From 9.2 kW to 11 kW			40x55x7		
101	Snap ring		[6]	Carbon tool steels TC 80	Ø 40	UNI 7435	1
200	Screw	32-125, 40-125		Gv. Steel 8.8 strenght class ISO 898-1	M 8x30	UNI 5739	8
		32-160, 40-160, 50-125, 65-125			M 10x35		10
		32-200, 40-200, 50-160, 50-200/9.2, 50-200/11, 65-160/7.5, 65-160/9.2, 65-160/11					12
235	Washer	32-125, 40-125		Galvanized Steel	8.4x17	UNI 6592	8
		32-160, 40-160, 50-125, 65-125			10.5x21		10
		32-200, 40-200, 50-160, 50-200/9.2, 50-200/11, 65-160/7.5, 65-160/9.2, 65-160/11					12

[1] Cast iron EN-GJL-200-EN 1561 for 3D 32-200/3
Aluminum AL-EN-1706-AC-46000-D for all the others
[2] EN 1.4301 (AISI 304) for 32, 40, 50 series
EN 1.4401 (AISI 316) for 65 series
[3] See **CONSTRUCTION 3**
[4] See **CONSTRUCTION 3**, "O-ring" column
[5] Only for: 32-200, 40-200, 50-160, 50-200/9.2, 50-200/11
[6] Only for pumps with 9.2 and 11 kW motor

(3/3)
Construction

Pump Name 3D 50-125/3.0

Customer	Date 2026-10-15	Company
Contact	Item no.	Issued by
Phone	Project	Phone
E-mail	Project ID	E-mail

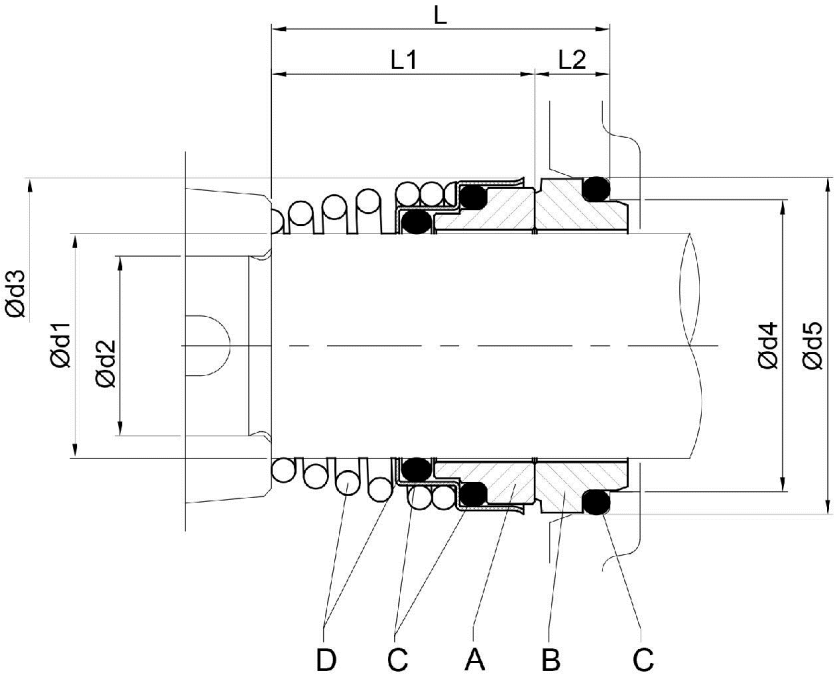

Pump type	Dimensions [mm]								Material Standard			
	d1	d2	d3	d4	d5	L	L1	L2	A Rotary seal ring	B Stationary seal ring	C O-ring	D Frame + Spring
32-125/160/200 40-125/160/200 50-125/160/200 65-125 65-160/7.5-9.2-11	22	19	38	31	37	37.5	27.5	10	Ceramic	Carbon	NBR	EN 1.4301 (AISI 304)